Cambridge International AS & A Level

Cambridge International Examinations
Cambridge International Advanced Subsidiary and Advanced Level

PHYSICS **9702/11**

Paper 1 Multiple Choice **October/November 2017**

1 hour 15 minutes

Additional Materials: Multiple Choice Answer Sheet
Soft clean eraser
Soft pencil (type B or HB is recommended)

8916777828

READ THESE INSTRUCTIONS FIRST

Write in soft pencil.
Do not use staples, paper clips, glue or correction fluid.
Write your name, Centre number and candidate number on the Answer Sheet in the spaces provided unless this has been done for you.
DO **NOT** WRITE IN ANY BARCODES.

There are **forty** questions on this paper. Answer **all** questions. For each question there are four possible answers **A**, **B**, **C** and **D**.
Choose the **one** you consider correct and record your choice in **soft pencil** on the separate Answer Sheet.

Read the instructions on the Answer Sheet very carefully.

Each correct answer will score one mark. A mark will not be deducted for a wrong answer.
Any working should be done in this booklet.
Electronic calculators may be used.

This document consists of **19** printed pages and **1** blank page.

© UCLES 2017

Data

speed of light in free space	$c = 3.00 \times 10^{8}\,\text{m s}^{-1}$
permeability of free space	$\mu_0 = 4\pi \times 10^{-7}\,\text{H m}^{-1}$
permittivity of free space	$\varepsilon_0 = 8.85 \times 10^{-12}\,\text{F m}^{-1}$
	$\left(\frac{1}{4\pi\varepsilon_0} = 8.99 \times 10^{9}\,\text{m F}^{-1}\right)$
elementary charge	$e = 1.60 \times 10^{-19}\,\text{C}$
the Planck constant	$h = 6.63 \times 10^{-34}\,\text{J s}$
unified atomic mass unit	$1\,\text{u} = 1.66 \times 10^{-27}\,\text{kg}$
rest mass of electron	$m_\text{e} = 9.11 \times 10^{-31}\,\text{kg}$
rest mass of proton	$m_\text{p} = 1.67 \times 10^{-27}\,\text{kg}$
molar gas constant	$R = 8.31\,\text{J K}^{-1}\,\text{mol}^{-1}$
the Avogadro constant	$N_\text{A} = 6.02 \times 10^{23}\,\text{mol}^{-1}$
the Boltzmann constant	$k = 1.38 \times 10^{-23}\,\text{J K}^{-1}$
gravitational constant	$G = 6.67 \times 10^{-11}\,\text{N m}^2\,\text{kg}^{-2}$
acceleration of free fall	$g = 9.81\,\text{m s}^{-2}$

© UCLES 2017

Formulae

uniformly accelerated motion	$s = ut + \frac{1}{2}at^2$ $v^2 = u^2 + 2as$
work done on/by a gas	$W = p\Delta V$
gravitational potential	$\phi = -\frac{Gm}{r}$
hydrostatic pressure	$p = \rho gh$
pressure of an ideal gas	$p = \frac{1}{3}\frac{Nm}{V}\langle c^2 \rangle$
simple harmonic motion	$a = -\omega^2 x$
velocity of particle in s.h.m.	$v = v_0 \cos \omega t$ $v = \pm\omega\sqrt{(x_0^2 - x^2)}$
Doppler effect	$f_o = \frac{f_s v}{v \pm v_s}$
electric potential	$V = \frac{Q}{4\pi\varepsilon_0 r}$
capacitors in series	$1/C = 1/C_1 + 1/C_2 + \ldots$
capacitors in parallel	$C = C_1 + C_2 + \ldots$
energy of charged capacitor	$W = \frac{1}{2}QV$
electric current	$I = Anvq$
resistors in series	$R = R_1 + R_2 + \ldots$
resistors in parallel	$1/R = 1/R_1 + 1/R_2 + \ldots$
Hall voltage	$V_H = \frac{BI}{ntq}$
alternating current/voltage	$x = x_0 \sin \omega t$
radioactive decay	$x = x_0 \exp(-\lambda t)$
decay constant	$\lambda = \frac{0.693}{t_{\frac{1}{2}}}$

© UCLES 2017

[Turn over

1 Which SI unit, expressed in base units, is **not** correct?

A unit of force, $\mathrm{kg\,m\,s^{-2}}$

B unit of momentum, $\mathrm{kg\,m\,s^{-1}}$

C unit of pressure, $\mathrm{kg\,m^{-2}\,s^{-2}}$

D unit of work, $\mathrm{kg\,m^{2}\,s^{-2}}$

2 Two forces, each of 10 N, act at a point P as shown. The angle between the directions of the forces is 120°.

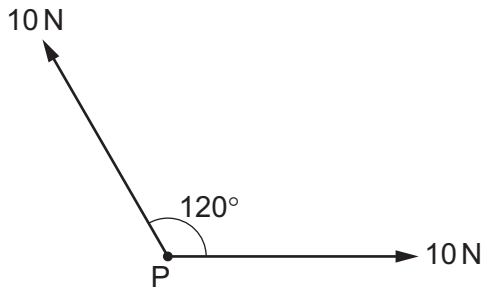

What is the magnitude of the resultant force?

A 5 N **B** 10 N **C** 17 N **D** 20 N

3 An ion is accelerated in a vacuum by a series of electrodes. A graph of the power supplied to the ion is plotted against time.

What is represented by the area under the graph between two times?

A the average force on the ion

B the change in kinetic energy of the ion

C the change in momentum of the ion

D the change in velocity of the ion

4 What is a typical value of the wavelength of a microwave travelling in a vacuum?

A 3 000 000 pm

B 30 nm

C 30 000 μm

D 3000 mm

© UCLES 2017

5 A double-slit interference experiment is used to determine the wavelength of light from a monochromatic source.

The following measurements are used.

slit separation $a = 0.50 \pm 0.02\,\text{mm}$

fringe separation $x = 1.7 \pm 0.1\,\text{mm}$

distance between slits and screen $D = 2.000 \pm 0.002\,\text{m}$

What is the percentage uncertainty in the calculated wavelength?

A 0.1% **B** 1% **C** 6% **D** 10%

6 In still air, a bird can fly at a speed of $10\,\text{m s}^{-1}$. The wind is blowing from the east at $8.0\,\text{m s}^{-1}$.

In which direction must the bird fly in order to travel to a destination that is due north of the bird's current location?

A 37° east of north

B 37° west of north

C 53° east of north

D 53° west of north

© UCLES 2017

7 An archer shoots an arrow at a target. The diagram shows the path of the arrow.

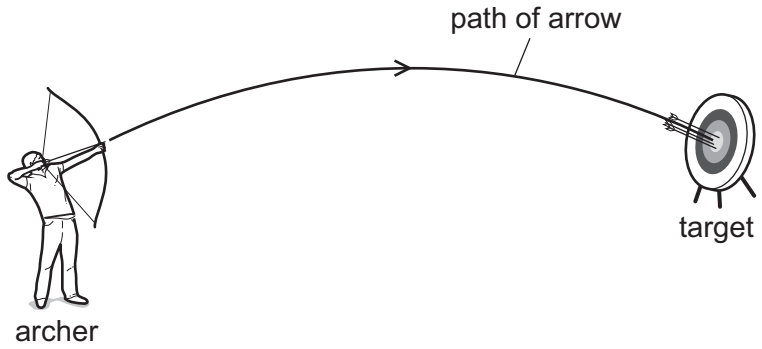

Air resistance is assumed to be negligible.

The graphs show how three different quantities *p*, *q* and *r*, relating to the motion of the arrow, vary with time.

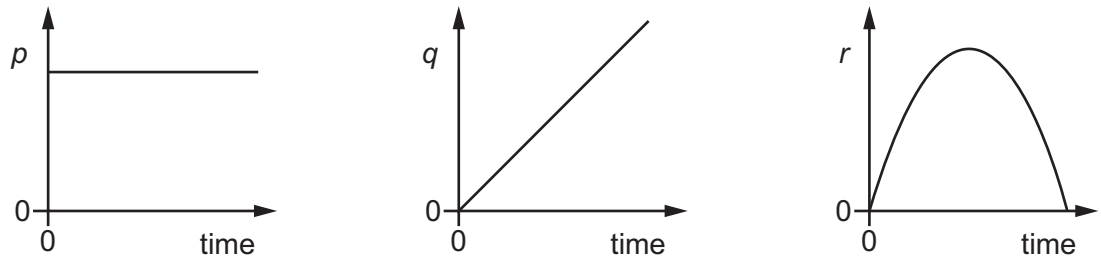

Which quantity is the horizontal component of displacement and which quantity is the vertical component of displacement of the arrow?

	horizontal component of displacement	vertical component of displacement
A	*p*	*q*
B	*q*	*r*
C	*r*	*p*
D	*r*	*q*

8 The three forces acting on a hot-air balloon that is moving vertically are its weight, the force due to air resistance and the upthrust force.

The hot-air balloon descends vertically at constant speed. The force of air resistance on the balloon is *F*.

Which weight of material must be released from the balloon so that it ascends vertically at the same constant speed?

A *F** **B** 2*F** **C** 3*F** **D** 4*F*

© UCLES 2017

9 A car is moving at constant speed in a straight line with the engine providing a driving force equal to the resistive force F.

When the engine is switched off, the car is brought to rest in a distance of 100 m by the resistive force.

It may be assumed that F is constant during the deceleration.

The process is then repeated for the same car with the same initial speed but with a constant resistive force of $0.800F$.

How far will the car travel while decelerating?

A 120 m **B** 125 m **C** 156 m **D** 250 m

10 What is a statement of the principle of conservation of momentum?

A In an elastic collision momentum is constant.

B Momentum is the product of mass and velocity.

C The force acting on a body is proportional to its rate of change of momentum.

D The momentum of an isolated system is constant.

11 Two solid spheres form an isolated system. Sphere X moves with speed $6\,\text{cm}\,\text{s}^{-1}$ in a straight line directly towards a stationary sphere Y, as shown.

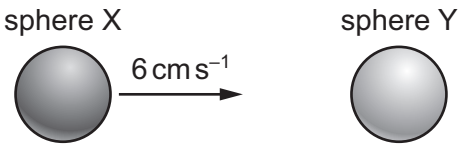

The spheres have a perfectly elastic collision. After the collision, sphere X moves with speed $2\,\text{cm}\,\text{s}^{-1}$ in the same direction as before the collision.

What is the speed of sphere Y?

A $2\,\text{cm}\,\text{s}^{-1}$ **B** $4\,\text{cm}\,\text{s}^{-1}$ **C** $6\,\text{cm}\,\text{s}^{-1}$ **D** $8\,\text{cm}\,\text{s}^{-1}$

© UCLES 2017

12 A block is submerged vertically in a liquid. The four diagrams show, to scale, the forces exerted by the liquid on the block.

Which diagram correctly shows a possible situation as viewed from the side?

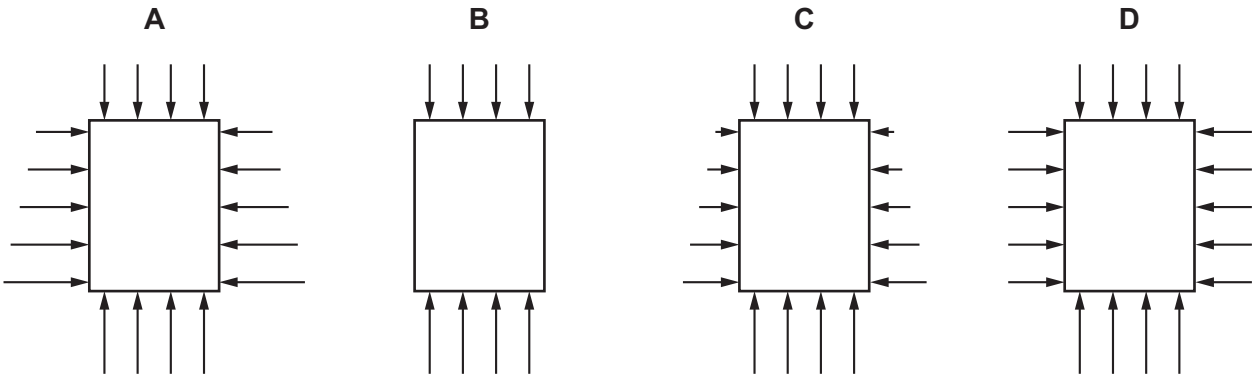

13 A rigid circular disc of radius *r* has its centre at X. A number of forces of equal magnitude *F* act at the edge of the disc. All the forces are in the plane of the disc.

Which arrangement of forces provides a moment of magnitude 2*Fr* about X?

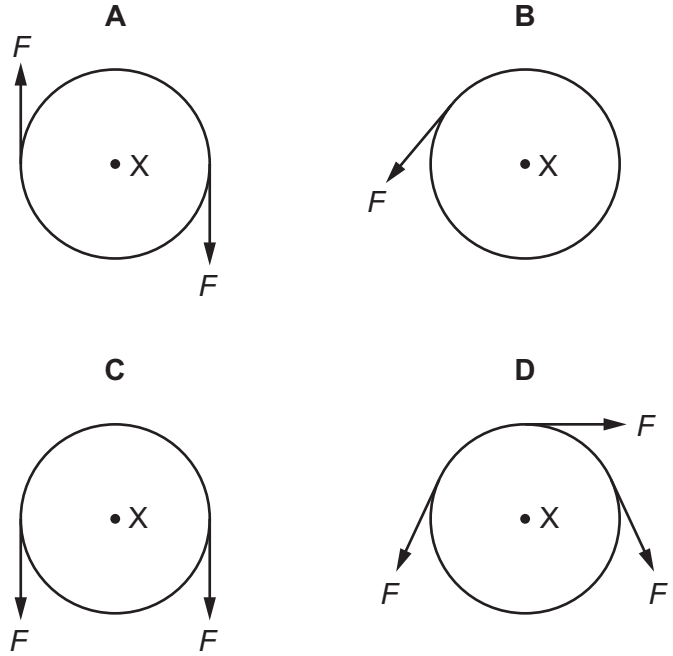

14 The diagram shows a motorised vehicle for carrying one person.

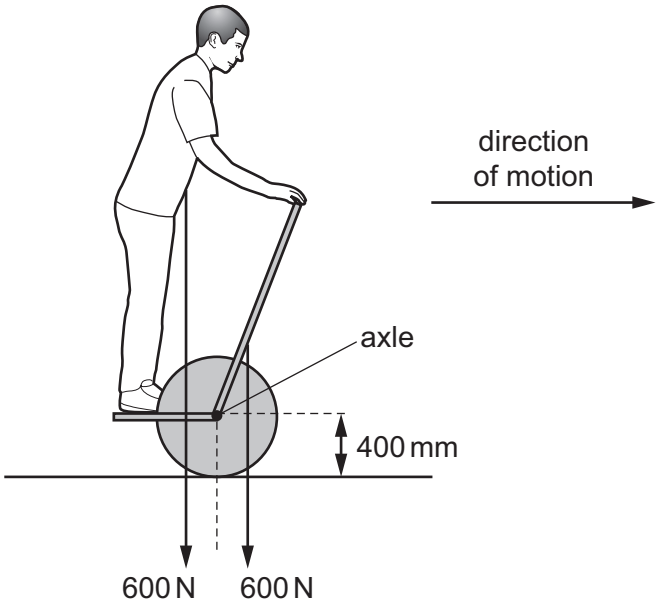

The vehicle has two wheels on one axle. The passenger stands on a platform between the wheels.

The weight of the machine is 600 N. Its centre of mass is 200 mm in front of the axle. The wheel radius is 400 mm.

When stationary, a passenger of weight 600 N stands with his centre of mass 200 mm behind the axle to balance the machine.

The motor is now switched on to provide a horizontal force of 90 N at the ground to move the vehicle forwards.

How far and in which direction must the passenger move his centre of mass to maintain balance?

A 60 mm backwards

B 60 mm forwards

C 140 mm backwards

D 140 mm forwards

15 The derivation of the pressure equation $\Delta p = \rho g \Delta h$ uses a number of relationships between quantities.

Which relationship is **not** used in the derivation of this equation?

A density = $\frac{\text{mass}}{\text{volume}}$

B potential energy = mass × acceleration of free fall × height

C pressure = $\frac{\text{force}}{\text{area}}$

D weight = mass × acceleration of free fall

16 Power is transferred through a machine as shown.

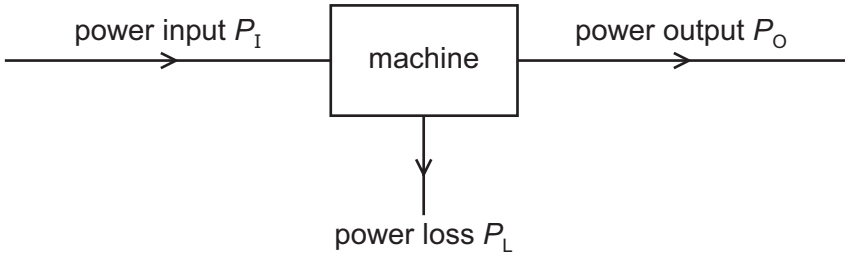

What is the efficiency of the machine?

A $\frac{P_I}{P_O + P_L}$ **B** $\frac{P_L}{P_I}$ **C** $\frac{P_L}{P_O}$ **D** $\frac{P_O}{P_I}$

17 A piston in a gas supply pump has an area of 400 cm^2. The pump moves the gas against a fixed pressure of 3000 Pa.

During part of its stroke, the piston moves a distance of 25 cm in one direction. How much work is done by the piston during this movement?

A 30 J **B** 3.0×10^3 J **C** 3.0×10^5 J **D** 3.0×10^7 J

18 A stone is projected vertically upwards from the ground at an initial speed of 15 $m\,s^{-1}$. Air resistance is negligible.

What is the maximum height reached by the stone?

A 0.76 m **B** 11 m **C** 23 m **D** 110 m

19 A turbine at a hydroelectric power station is situated 30 m below the level of the surface of a large lake. The water passes through the turbine at a rate of 340 m^3 per minute.

The overall efficiency of the turbine and generator system is 90%.

What is the output power of the power station? (The density of water is 1000 $kg\,m^{-3}$.)

A 0.15 MW **B** 1.5 MW **C** 1.7 MW **D** 90 MW

© UCLES 2017

20 A spring is loaded with weights. When the weights are removed, the spring returns to its original length.

The spring is then loaded with heavier weights. When the weights are removed, the spring is longer than it was originally.

Which types of deformation are shown by this experiment?

A both elastic and plastic deformation

B elastic deformation only

C neither elastic nor plastic deformation

D plastic deformation only

21 The stress-strain graph for a metal is shown.

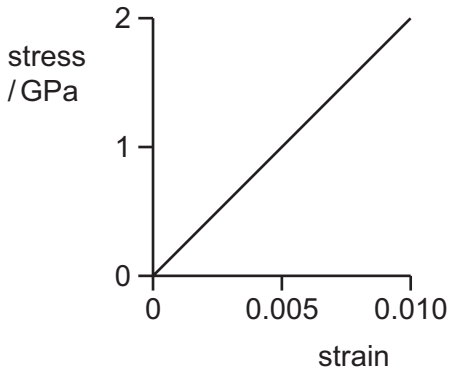

What is the strain energy per unit volume of a rod made from this metal when the strain of the rod is 0.010?

A $10\,kJ\,m^{-3}$ **B** $100\,kJ\,m^{-3}$ **C** $1.0\,MJ\,m^{-3}$ **D** $10\,MJ\,m^{-3}$

22 The displacement-time graph for a layer of air in the path of a sound wave is shown.

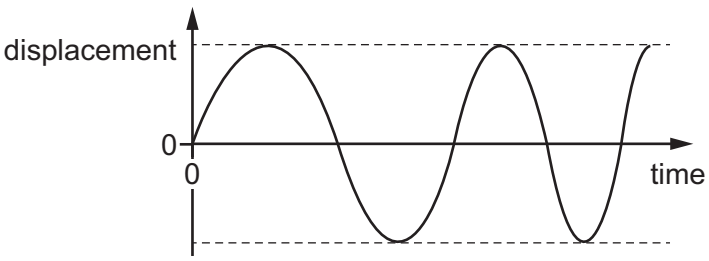

Which wave quantity is increasing?

A amplitude

B frequency

C period

D wavelength

23 A loudspeaker emits a sound wave into a tube initially full of water.

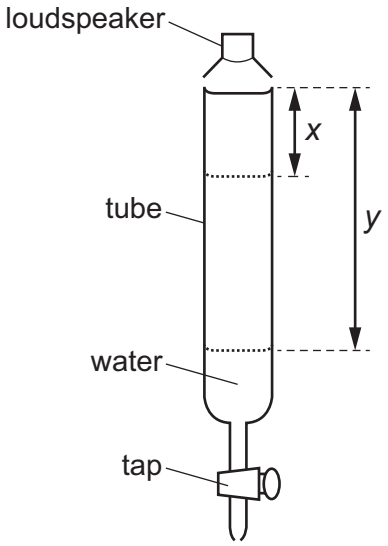

A tap at the bottom of the tube is opened so that water slowly leaves the tube. For some lengths of the air column in the tube, the sound heard is much louder.

The first loud sound is heard when the air column in the tube has length x.

The next time that a loud sound is heard is when the air column in the tube has length y.

What is the wavelength of the sound wave from the loudspeaker?

A $2x$ **B** $4y$ **C** $2(y - x)$ **D** $4(y - x)$

24 Diffraction can be observed when a wave passes an obstruction. The diffraction effect is greatest when the wavelength and the obstruction are similar in size.

For waves travelling through air, what is the combination of wave and obstruction that could best demonstrate diffraction?

A microwaves passing a steel post

B radio waves passing a copper wire

C sound waves passing a human hair

D visible light waves passing a gate post

© UCLES 2017

25 Light of a particular wavelength λ_s is emitted from the Sun. At any instant, a band of wavelengths ranging from less than λ_s to more than λ_s is observed on the Earth. This is caused by the Doppler effect.



What could be the explanation for this Doppler effect?

A The Sun is moving at right-angles to a line joining the Sun and the Earth.

B The Sun is moving away from the Earth.

C The Sun is moving towards the Earth.

D The Sun is rotating.

26 What is the order of magnitude of the frequencies of electromagnetic waves in the visible spectrum?

A 10^{10} Hz **B** 10^{12} Hz **C** 10^{14} Hz **D** 10^{16} Hz

27 Two signals approach each other, as shown.

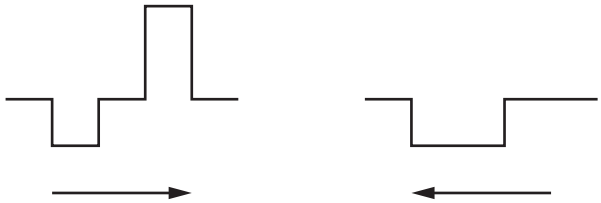

At one instant, the signals completely overlap.

According to the principle of superposition, what is the shape of the resulting signal at this instant?

A

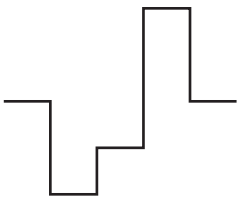

B

C

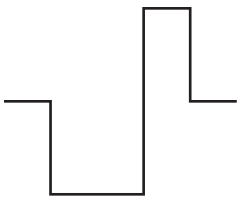

D

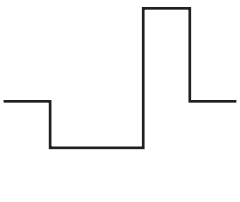

28 Coherent waves are produced at P and at Q and travel outwards in all directions. The line RS is half-way between P and Q and perpendicular to the line joining P and Q. The distance RS is much greater than the distance PQ.

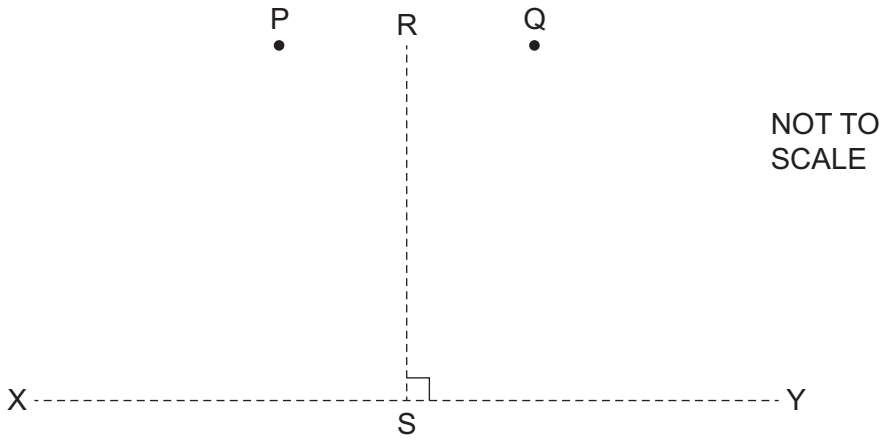

Along which of the lines shown is an interference pattern observed?

A both RS and XY

B RS only

C XY only

D neither RS nor XY

© UCLES 2017

29 A bar vibrates with frequency f to produce water waves in a ripple tank.

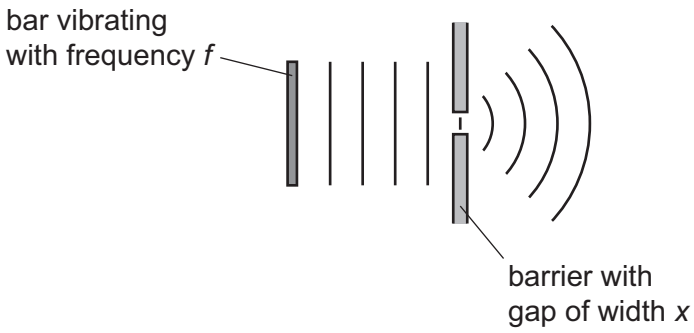

The waves pass through a gap of width x in a barrier so that diffraction occurs.

Which combination of vibration frequency and gap width will produce the smallest angle of diffraction?

	vibration frequency	gap width
A	$\frac{f}{2}$	$\frac{x}{2}$
B	$\frac{f}{2}$	$2x$
C	$2f$	$\frac{x}{2}$
D	$2f$	$2x$

30 A diffraction grating is used to measure the wavelength of monochromatic light, as shown in the diagram.

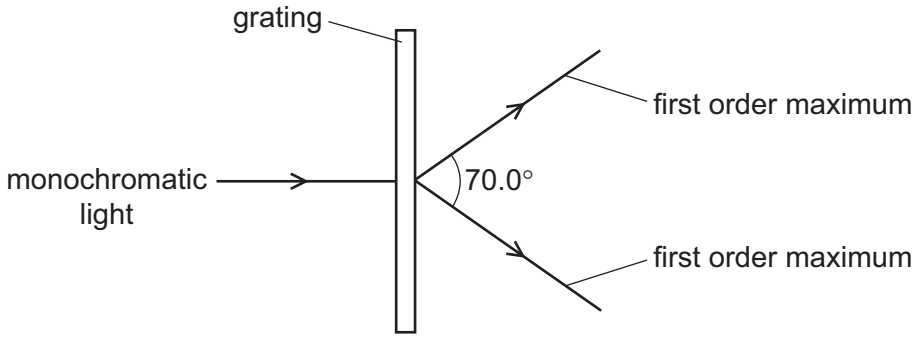

The spacing of the slits in the grating is 1.00×10^{-6} m. The angle between the first order diffraction maxima is 70.0°.

What is the wavelength of the light?

A 287 nm **B** 470 nm **C** 574 nm **D** 940 nm

© UCLES 2017

31 A small charged sphere of mass 0.80 g hangs from a light thread inside a vertical uniform electric field of strength 2000 V m^{-1}. The thread passes over two frictionless pulleys and a mass of 2.00 g hangs on the other end.

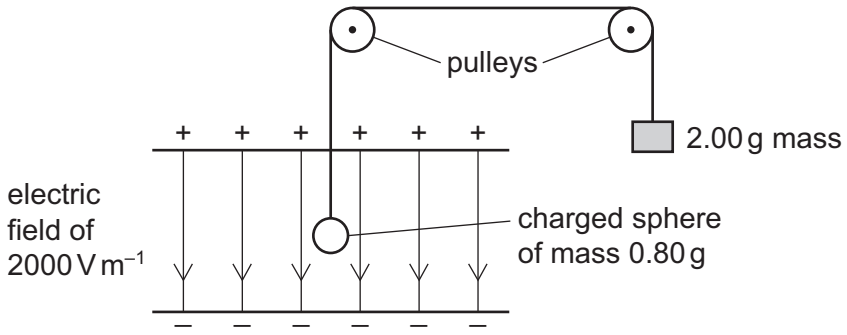

The sphere is in equilibrium.

What is the charge on the sphere?

A –5.9 μC **B** +0.60 μC **C** +5.9 μC **D** +9.8 μC

32 An electron enters a region of space where there is a uniform electric field *E* as shown.

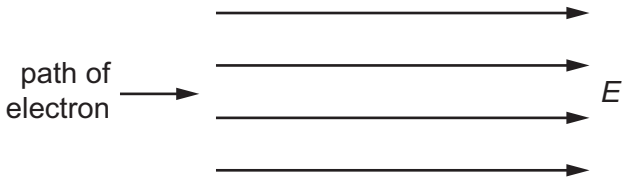

Initially, the electron is moving parallel to, and in the direction of, the electric field.

What is the subsequent path and change of speed of the electron caused by the electric field?

	path of electron	speed of electron
A	curved	decreases
B	curved	increases
C	linear	decreases
D	linear	increases

© UCLES 2017

33 The current in the circuit shown is 3.2 mA.

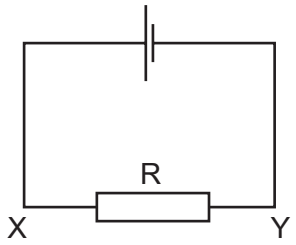

What are the direction of flow and the rate of flow of electrons through the resistor R?

	direction of flow	rate of flow / s^{-1}
A	X to Y	2.0×10^{16}
B	X to Y	5.1×10^{-22}
C	Y to X	2.0×10^{16}
D	Y to X	5.1×10^{-22}

34 A filament lamp has a resistance of 180 Ω when the current in it is 500 mA.

What is the power dissipated in the lamp?

A 45 W **B** 90 W **C** 290 W **D** 360 W

35 Two copper wires X and Y have the same volume. Wire Y is four times as long as wire X.

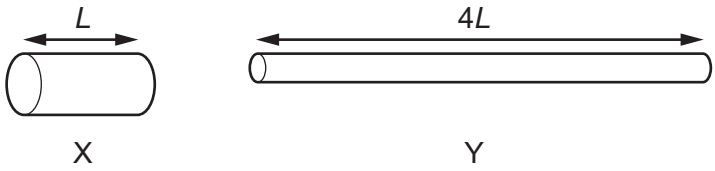

What is the ratio $\frac{\text{resistance of wire Y}}{\text{resistance of wire X}}$?

A 1 **B** 4 **C** 8 **D** 16

36 In the circuit shown, the ammeter reading is I and the voltmeter reading is V.

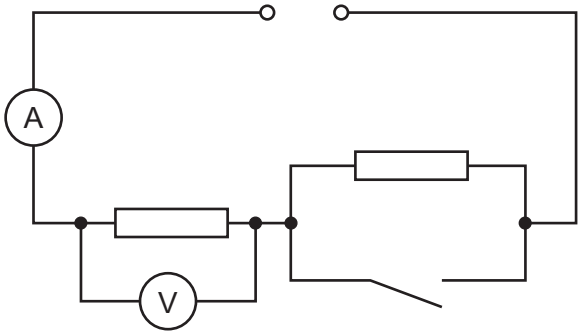

When the switch is closed, which row describes what happens to I and to V?

	I	V
A	decreases	decreases
B	increases	increases
C	increases	stays the same
D	stays the same	increases

37 A cell of electromotive force E and negligible internal resistance is connected to a network of resistors of resistances R_1, R_2, R_3 and R_4 as shown.

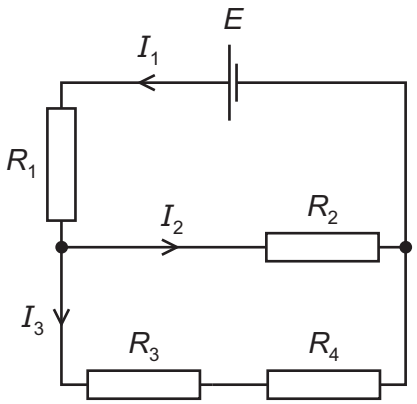

The branches of the circuit have currents I_1, I_2 and I_3.

Which equation is correct?

A $I_1R_1 + I_2R_2 = I_3R_3 + I_3R_4$

B $I_2R_2 - I_3R_4 - I_3R_3 = 0$

C $E = I_1R_1 + I_2R_2 + I_3R_3 + I_3R_4$

D $E = I_1R_1 + I_2R_2 - I_3R_3 - I_3R_4$

© UCLES 2017

38 The circuit diagram shows four resistors of different resistances *P*, *Q*, *R* and *S* connected to a battery.

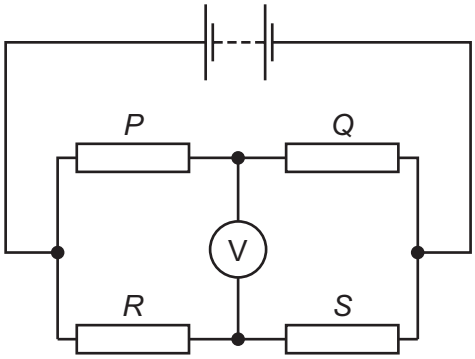

The voltmeter reading is zero.

Which equation is correct?

A $P - Q = R - S$

B $P - S = Q - R$

C $PQ = RS$

D $PS = QR$

39 An astatine nucleus has a nucleon number of 218 and a proton number of 85. It decays to form a polonium nucleus, emitting a β^- particle and an α-particle in the process.

What are the nucleon number and the proton number of this polonium nucleus?

	nucleon number	proton number
A	214	83
B	214	84
C	215	83
D	216	82

40 What is the quark composition of a hydrogen-3 nucleus, ${}^{3}_{1}\mathrm{H}$?

	number of quarks	
	up	down
A	4	5
B	5	4
C	5	7
D	7	5

© UCLES 2017

BLANK PAGE

Permission to reproduce items where third-party owned material protected by copyright is included has been sought and cleared where possible. Every reasonable effort has been made by the publisher (UCLES) to trace copyright holders, but if any items requiring clearance have unwittingly been included, the publisher will be pleased to make amends at the earliest possible opportunity.

To avoid the issue of disclosure of answer-related information to candidates, all copyright acknowledgements are reproduced online in the Cambridge International Examinations Copyright Acknowledgements Booklet. This is produced for each series of examinations and is freely available to download at www.cie.org.uk after the live examination series.

Cambridge International Examinations is part of the Cambridge Assessment Group. Cambridge Assessment is the brand name of University of Cambridge Local Examinations Syndicate (UCLES), which is itself a department of the University of Cambridge.